ENLIGHTED - WIRELESS LIGHTING CONTROL RISER DIAGRAM

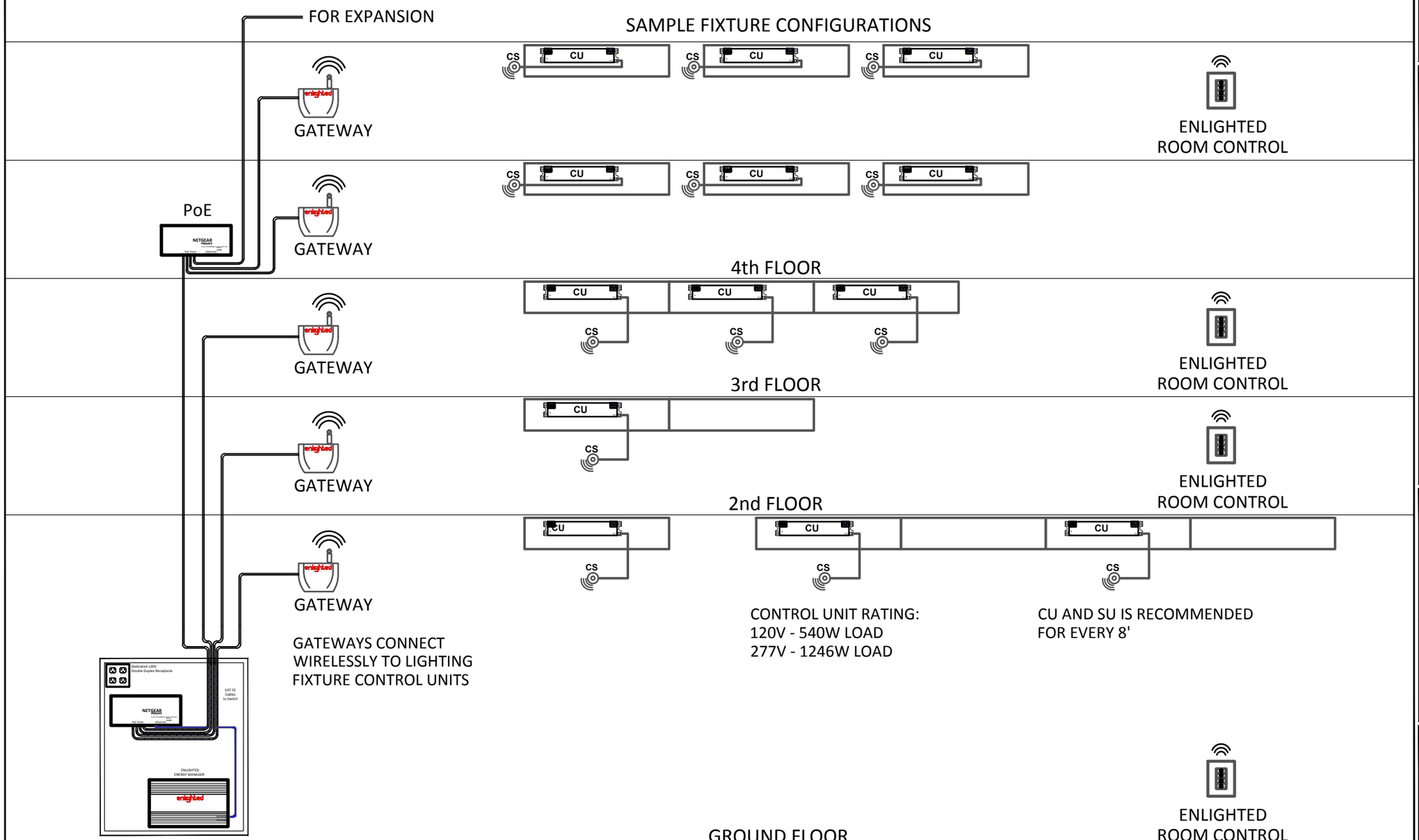

ENERGY MANAGER AND PoE SWITCH ARE MOUNTED IN ENLIGHTED ENCLOSURE, TYPICALLY IN ELECTRICAL ROOM OR IDF ROOM.

NOTES:

1) THE MAXIMUM CAT5e CABLE DISTANCE BETWEEN ANY ENLIGHTED ENERGY MANAGER AND NETWORK SWITCH, GATEWAY AND NETWORK SWITCH OR NETWORK SWITCH TO NETWORK SWITCH IS 330'.
2) ONE 20A, 120 VOLT DUPLEX RECEPTACLE REQUIRED FOR EACH ENERGY MANAGER.

enlighted

930 Benecia Avenue
Sunnyvale, CA 94085
www.enlightedinc.com

No.	Description	Date
	Revised Enlighted Diagram	2-18-14
	Revised Enlighted Diagram	2-24-14

WIRELESS LIGHTING CONTROL RISER DIAGRAM

ENLIGHTED DETAIL DIAGRAM

Project Number:
Date: 02-24-2014
Drawn By: Jerel Beduya - Enlighted
Checked By: Phil Hall/Matt Price

Scale: Not to Scale

ENLIGHTED - CONTROLLED FIXTURE WIRING DIAGRAMS
CONTROL UNIT (CU) CONTROLLING 1 AND 2 FIXTURES

(1:1 DIMMING) - FIXTURE WITH 1 CU AND 1 LED DRIVER OR DIMMING BALLAST

CONTROL UNIT RATING:
120V - 540W LOAD
277V - 1246W LOAD

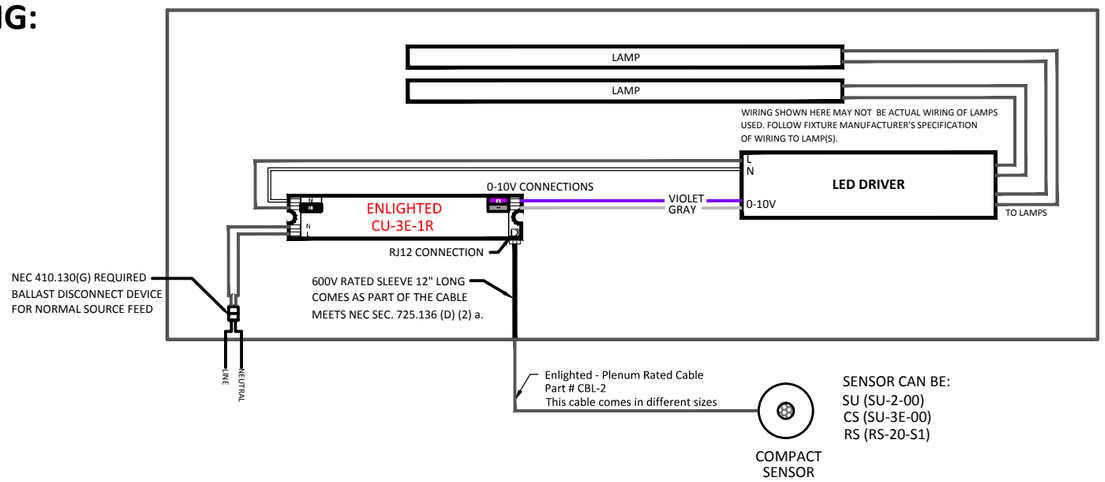

(2:1 DIMMING) - 2 FIXTURES CONTROLLED WITH 1 CU AND 1 LED DRIVER OR DIMMING BALLAST

1 CU AND SU IS RECOMMENDED FOR EVERY 8'

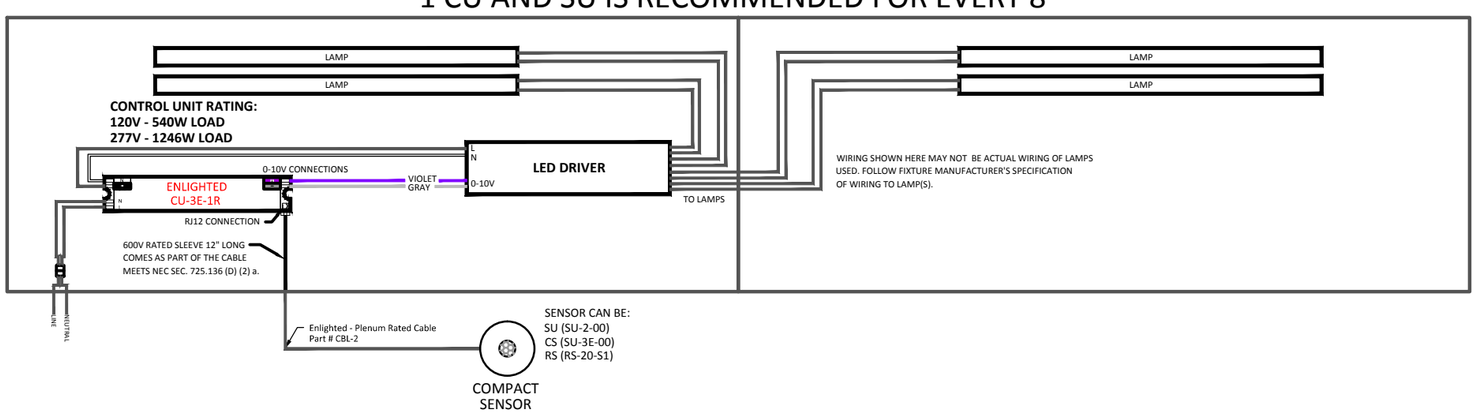

enlighted
930 Benecia Avenue
Sunnyvale, CA 94085
www.enlightedinc.com

No.	Description	Date
	Revised Enlighted Diagram	2-18-14
	Revised Enlighted Diagram	2-24-14

CONTROLLED FIXTURE WIRING DIAGRAMS

ENLIGHTED DETAIL DIAGRAM

Project Number:
Date: 02-24-2014
Drawn By: Jerel Beduya - Enlighted
Checked By: Phil Hall/Matt Price

Enlighted Schematic For Reference

ENLIGHTED CONTROL UNIT CONTROLLING A SINGLE DOWNLIGHT FIXTURE

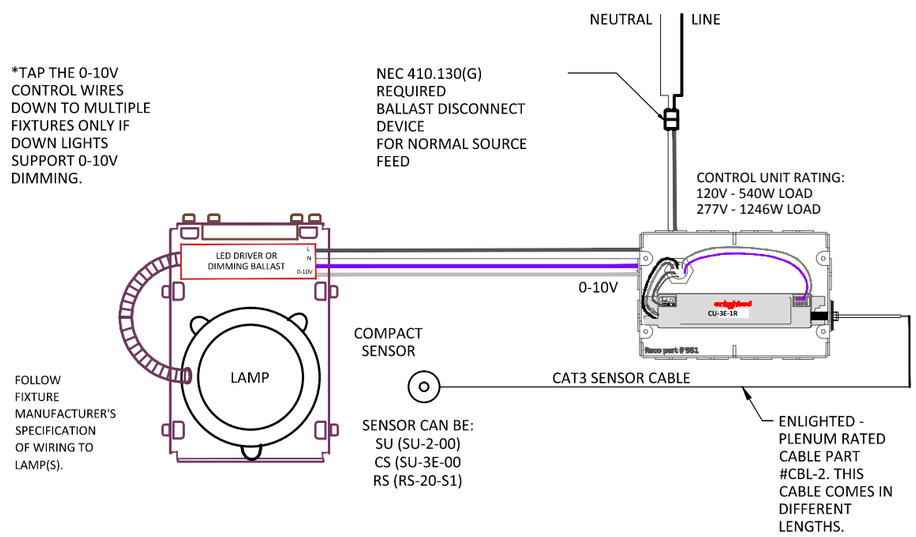

ENLIGHTED CONTROL UNIT CONTROLLING MULTIPLE DOWNLIGHT FIXTURES

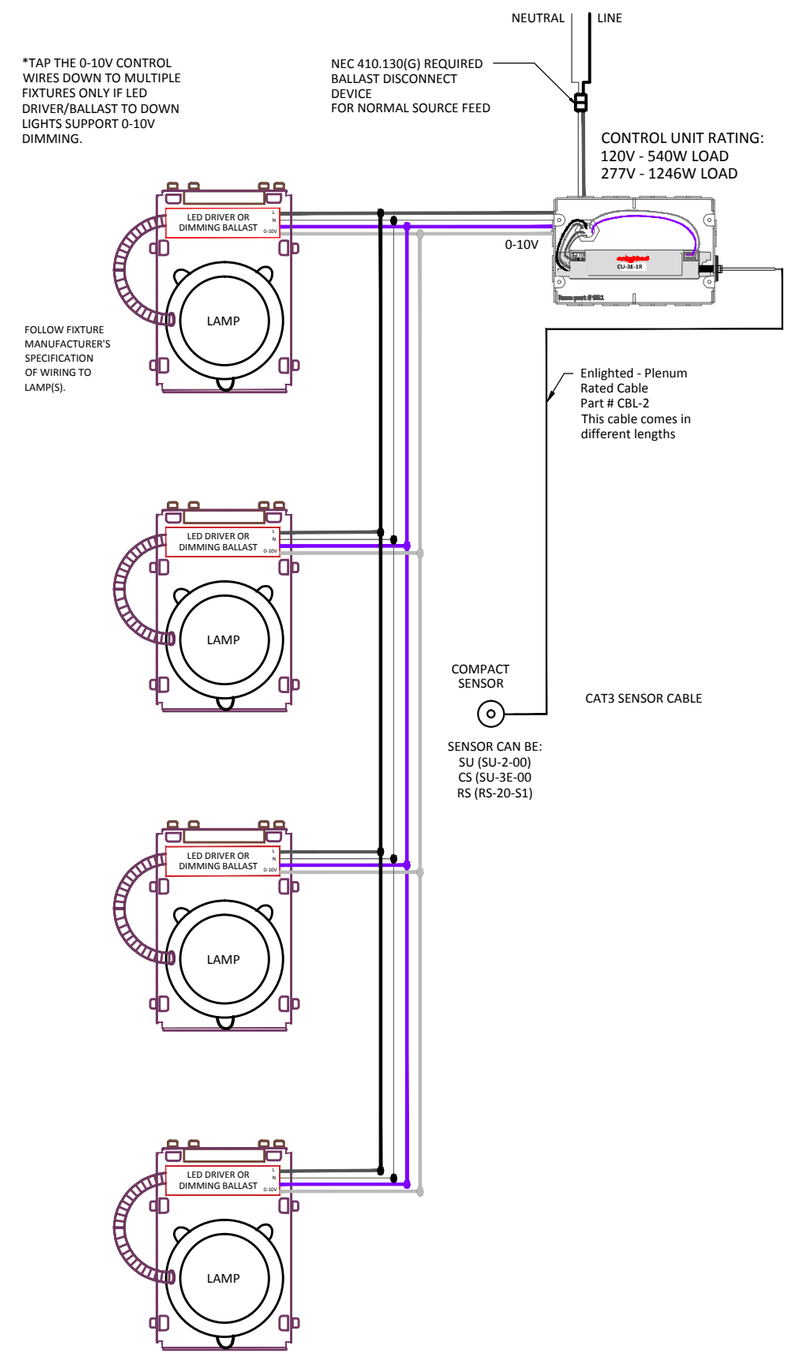

enlighted
930 Benecia Avenue
Sunnyvale, CA 94085
650.964.1094
www.enlightedinc.com

No.	Description	Date
	Revised Enlighted Diagram	05.31.14

CONTROL UNIT WITH ONE AND MULTIPLE DOWNLIGHT FIXTURES

ENLIGHTED DETAIL DIAGRAM

Project Number:
Date: 05-31-2014
Drawn By: Jerel Beduya - Enlighted
Checked By:

Scale: Not to Scale

ENLIGHTED - CONTROL UNIT IN J-BOX ABOVE 2'x2' FIXTURE

enlighted
930 Benecia Avenue
Sunnyvale, CA 94085
650.964.1094
www.enlightedinc.com

2'x2' FIXTURE - TOP VIEW LOOKING DOWN

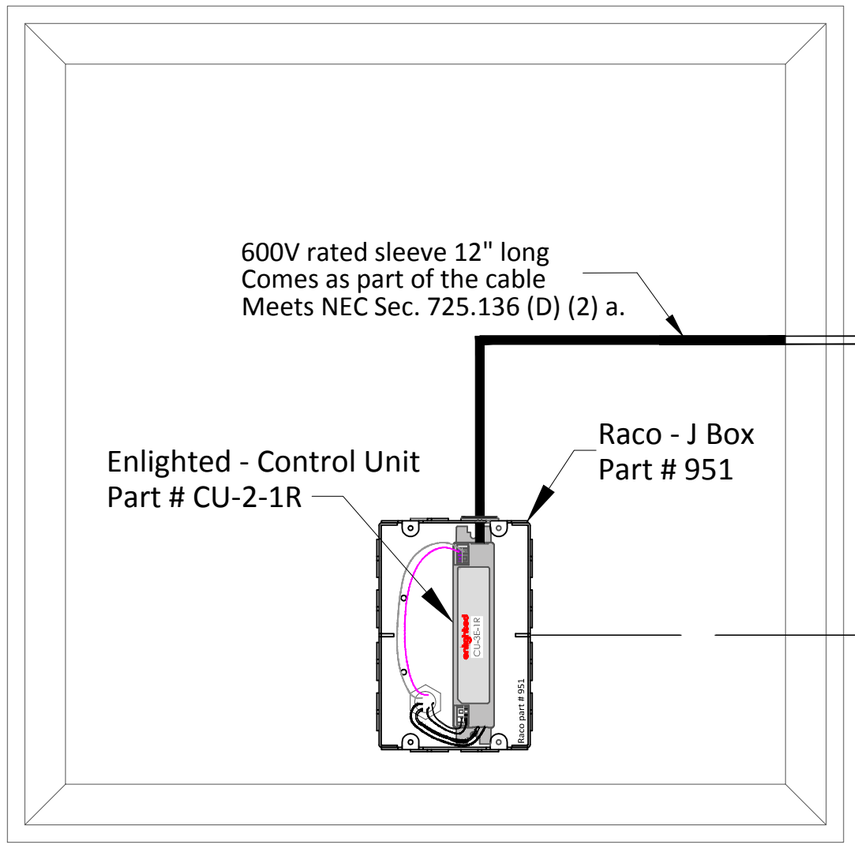

SENSOR CAN BE:
SU (SU-2-00)
CS (SU-3E-00)
RS (RS-20-S1)

Enlighted
Compact Sensor
Part # SU-3E-00

CU IN J-BOX DETAIL

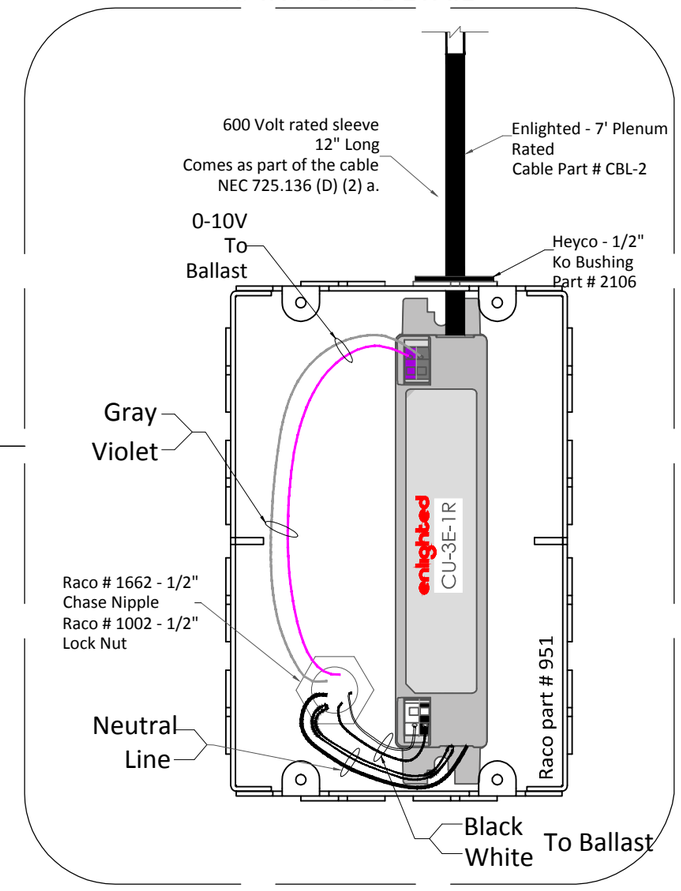

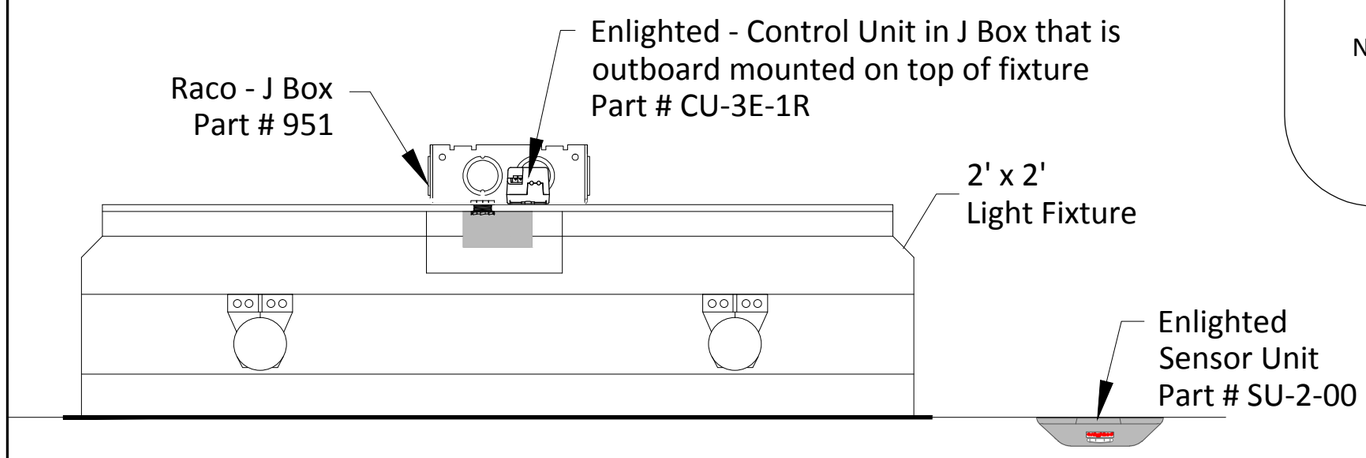

No.	Description	Date
	Revised Enlighted Diagram	02.18.14

CONTROL UNIT IN J-BOX ABOVE 2'x2' FIXTURE DIAGRAM

ENLIGHTED DETAIL DIAGRAM

Project Number:
Date: 02-18-2014
Drawn By: Jerel Beduya - Enlighted
Checked By: Phil Hall/Matt Price

Scale: Not to Scale

ENLIGHTED
24" x 20" x 6"
NEMA 1 ENCLOSURE
(PART #ENCL)

Conductors to 120V
Dedicated Receptacle.

Conduit for CAT5e
Cables From Gateway

ENLIGHTED - NEMA 1 ENCLOSURE

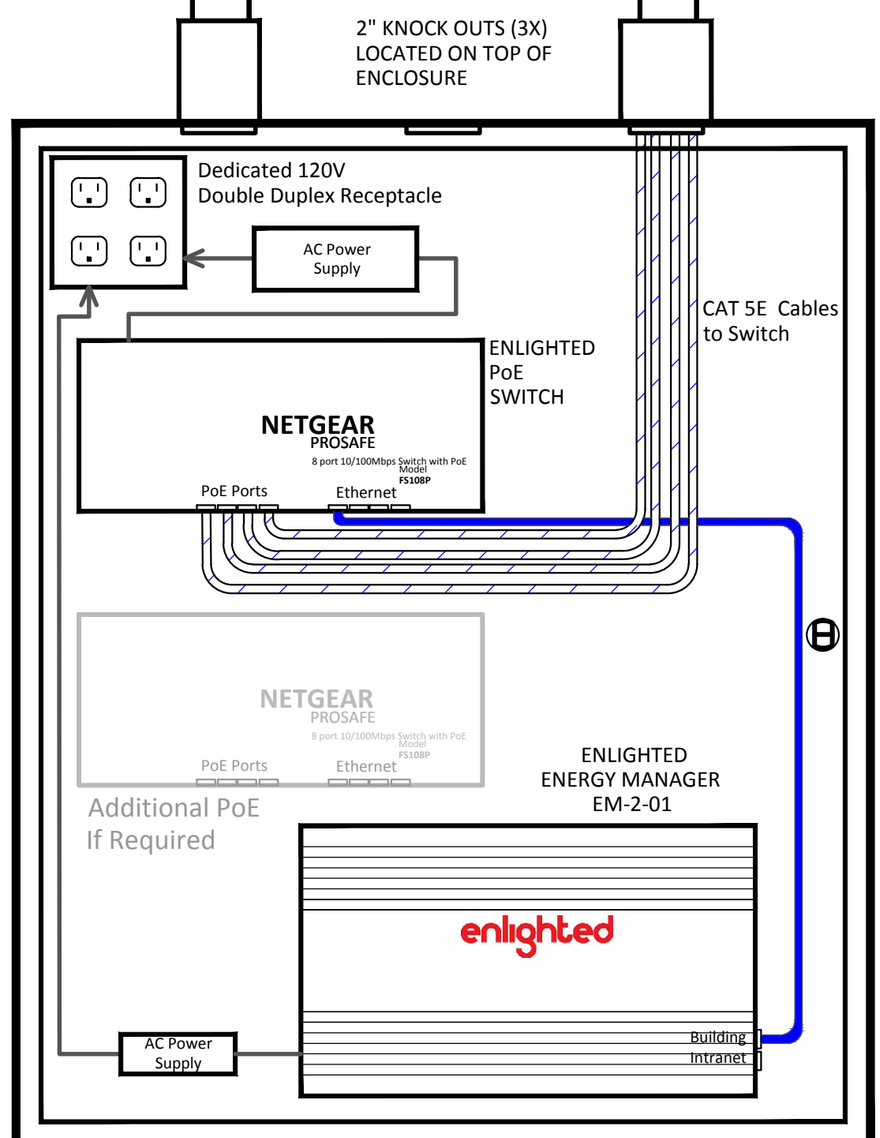

1) NEMA TYPE 1 RATED
2) 14GA CARBON STEEL
   CONSTRUCTION PAINTED, ANSI 61
3) UL LISTED
4) 3/4 PLYWOOD BACK PANEL 21" x 17"

KEY
LOCKABLE

enlighted

930 Benecia Avenue
Sunnyvale, CA 94085
www.enlightedinc.com

No.	Description	Date
	Revised Enlighted Diagram	2-18-14

NEMA 1
ENCLOSURE

ENLIGHTED
DETAIL DIAGRAM

Project Number:
Date: 02-18-2014
Drawn By: Jerel Beduya - Enlighted
Checked By: Phil Hall/Matt Price

Scale: Not to Scale